| | | |
|---|---|---|
| **EN** | **UBC10.241, UBC10.241-N1 Installation Manual** | **DC-UPS with Built-in Battery 24V, 10A, 240W** |
| **DE** | **UBC10.241, UBC10.241-N1 Installationsanleitung** | **DC-USV mit eingebauter Batterie 24V, 10A, 240W** |
| **FR** | **UBC10.241, UBC10.241-N1 Manuel d'installation** | **Sauvegarde CC avec batterie intégrée 24V, 10A, 240W** |
| **ES** | **UBC10.241, UBC10.241-N1 Manual de instalación** | **SAI-CC con batería integrada 24V, 10A, 240W** |
| **IT** | **UBC10.241, UBC10.241-N1 Manuale di Installazione** | **UPS in CC con batteriea integrata 24V, 10A, 240W** |
| **PT** | **UBC10.241, UBC10.241-N1 Manual de instalação** | **UPS com bateria integrada 24V, 10A, 240W** |

Doc. ID: PU-357.015.05-xxA (2018-03-27)

Pb

## Read this first! — English

Before operating this device, please read this manual thoroughly and retain this manual for future reference! This device may only be installed and put into operation by qualified personnel. If damage or malfunction should occur during operation, immediately turn power off and send device to the factory for inspection. The device does not contain serviceable parts. The information presented in this document is believed to be accurate and reliable and may change without notice. For any clarifications the English translation will be used.

**⚠ WARNING** **Risk of electrical shock, fire, personal injury, or death:**

- Turn power off before working on the device. Protect against inadvertent re-powering.
- Do not open, modify or repair the device.
- Use caution to prevent any foreign objects from entering the housing.
- Do not use in wet locations or in areas where moisture or condensation can be expected.
- Do not touch during power-on and immediately after power-off. Hot surfaces may cause burns.

## Vor Inbetriebnahme lesen! — Deutsch

Bitte lesen Sie diese Warnungen und Hinweise sorgfältig durch, bevor Sie das Gerät in Betrieb nehmen. Bewahren Sie die Anleitung zum Nachlesen auf. Das Gerät darf nur durch fachkundiges und qualifiziertes Personal installiert werden. Bei Funktionsstörungen oder Beschädigungen schalten Sie sofort die Versorgungsspannung ab und senden das Gerät zur Überprüfung ins Werk. Das Gerät beinhaltet keine Servicebauteile. Die angegebenen Daten dienen allein der Produktbeschreibung und sind nicht als zugesicherte Eigenschaften im Rechtssinne aufzufassen. Im Zweifelsfall gilt der englische Text.

**⚠ WARNUNG** **Missachtung nachfolgender Punkte kann einen elektrischen Schlag, Brände, schwere Unfälle oder Tod zur Folge haben:**

- Schalten Sie die Eingangsspannung vor Installations-, Wartungs- oder Änderungsarbeiten ab und sichern Sie diese gegen unbeabsichtigtes Wiedereinschalten.
- Führen Sie keine Änderungen oder Reparaturversuche am Gerät durch. Gerät nicht öffnen!
- Verhindern Sie das Eindringen von Fremdkörpern, wie z.B. Büroklammern und Metallteilen.
- Betreiben Sie das Gerät nicht in feuchter Umgebung oder in einer Umgebung, bei der mit Betauung oder Kondensation zu rechnen ist.
- Gehäuse nicht während des Betriebes oder kurz nach dem Abschalten berühren. Heiße Oberflächen können Verletzungen verursachen.

## A lire avant mise sous tension! — Français

Veuillez lire ces instructions de montage et d'entretien avant de mettre l'alimentation sous tension. Conservez ce manuel qui vous sera toujours utile. Cette alimentation ne doit être installée que par du personnel qualifié et compétent. En cas de dommage ou dysfonctionnement, coupez immédiatement la tension d'alimentation et retournez l'appareil à l'usine pour vérification. ! L'alimentation ne contient pas de pièces échangeables Les données indiquées dans ce document servent uniquement à donner une description du produit et n'ont aucune valeur juridique. En cas de divergences, le texte anglais fait foi.

**⚠ AVERTISSEMENT** **Prendre en compte les points suivants, afin d'éviter toute détérioration électrique, incendie, dommage aux personnes ou mort:**

- Mettre l'alimentation hors tension avant toute intervention sur celle-ci et s'assurer qu'il n'y a pas risque de redémarrage.
- Ne pas ouvrir, modifier ou réparer l'alimentation.
- Veiller à ce qu'aucun objet ne rentre en contact avec l'intérieur de l'alimentation (trombones, pièces métalliques).
- Ne pas faire fonctionner l'appareil dans un environnement humide ou dans un environnement où il peut y avoir de la condensation.
- Ne pas toucher le carter pendant le fonctionnement ou directement après la mise hors tension. Surface chaude risquant d'entraîner des blessures.

## Lea primero! — Español

Conserve este manual como referencia para futuras consultas. La fuente de alimentación solo puede ser instalada y puesta en funcionamiento por personal cualificado. Por favor lea detenidamente este manual antes de conectar la fuente de alimentación. Si se produce un fallo o mal funcionamiento durante la operación, desconecte inmediatamente la tensión de alimentación. En ambos casos, el equipo debe ser inspeccionado en fábrica. La información presentada en este documento es exacta y fiable en cuanto a la descripción del producto y puede cambiar sin aviso. En casa de duda, prevalece el texto inglés.

**⚠ ADVERTENCIA** **Riesgo de descarga eléctrica, incendio, accidente grave o muerte:**

- Desconectar la tensión de red antes de trabajar en la fuente de alimentación. Evite una posible reconexión involuntaria.
- No realizar ninguna modificación o reparación de la unidad. No abrir la unidad.
- Evitar la introducción en la carcasa de objetos extraños.
- No usar el equipo en ambientes húmedos. No operar el equipo en ambientes donde se espere la formación de rocío o condensación.
- No tocar durante el funcionamiento ni inmediatamente después del apagado. El calor de la superficie puede causar quemaduras graves.

## Leggere prima questa parte! — Italiano

Prima di collegare il sistema di alimentazione elettrica si prega di leggere attentamente le seguenti avvertenze. Conservare le istruzioni per la consultazione futura. Il sistema di alimentazione elettrica deve essere installato solo da personale competente e qualificato. Se durante il funzionamento si verificano anomalie o guasti, scollegare immediatamente la tensione di alimentazione. In entrambi i casi è necessario far controllare l'apparecchio dal produttore! I dati sono indicati solo a scopo descrittivo del prodotto e non vanno considerati come caratteristiche garantite dell'apparecchio. In caso di differenze o problemi è valido il testo inglese

**⚠ AVVERTENZA** **Il mancato rispetto delle seguenti norme può provocare folgorazione elettrica, incendi, gravi incidenti e perfino la morte:**

- Prima di eseguire interventi di installazione, di manutenzione o di modifica scollegare la tensione di rete ed adottare tutti i provvedimenti necessari per impedirne il ricollegamento non intenzionale.
- Non tentare di aprire, di modificare o di riparare da soli l'apparecchio.
- Impedire la penetrazione di corpi estranei nell'apparecchio, ad esempio fermagli o altri oggetti metallici.
- Non far funzionare l'apparecchio in un ambiente umido. Non far funzionare l'apparecchio in un ambiente soggetto alla formazione di condensa o di rugiada.
- Non toccare quando acceso e subito dopo lo spegnimento. La superficie calda può causare scottature.

## Leia primeiro! — Português

Recomendamos a leitura cuidadosa das seguintes advertências e observações, antes de colocar em funcionamento a fonte de alimentação. Guarde as Instruções para futura consulta, em casos de dúvida. A fonte de alimentação deverá ser instalada apenas por profissionais da área, tecnicamente qualificados. Se por acaso, durante a utilização ocorrer algum defeito de funcionamento ou dano, desligue imediatamente a tensão de alimentação. Em ambos os casos, será necessária uma verificação na Fábrica! Os dados mencionados têm como finalidade somente a descrição do produto, e não devem ser interpretados como propriedades garantidas no sentido jurídico. Em caso de duvidas aplica-se o texto em inglês.

**⚠ ATENÇÃO** **A não observância ou o incumprimento dos pontos a seguir mencionados, poderá causar uma descarga elétrica, incêndios, acidentes graves ou morte:**

- Antes de trabalhos de instalação, manutenção ou modificação, desligue a tensão de alimentação, protegendo-a contra uma nova ligação involuntária.
- Não efectue nenhuma modificação ou tentativa de reparação no aparelho. Quando necessário contacte o seu distribuidor. Não abra o aparelho.
- Proteger a fonte de alimentação contra a introdução inadvertida de corpos metálicos, como por ex., clipes ou outras peças de metal.
- Não usar o aparelho em ambientes húmidos. Não usar o aparelho em ambientes propensos a condensações.
- Não tocar enquanto estiver em funcionamento, nem após a desligar. A superficie poderá estar quente e provocar lesões.

**Headquarters:** PULS GmbH, Elektrastr. 6, 81925 Munich, Germany, www.pulspower.com

**Germany** +49 89 9278 0 | **France** +33 478 668 941 | **Austria** +43 2764 3213 | **Switzerland** +41 56 450 18 10
**China** +86 512 62881820 | **North America** +1 630 587 9780 | **Singapore** +65 6684 2310 | **United Kingdom** +44 1525 841001

The information in this document is believed to be accurate and reliable and may change without notice.

LRI Distribuída no Brasil pela LRI | vendas@lri.com.br | 51 2129-3000

## Product Description

The UBC10.241 is an uninterruptible power supply controller (DC-UPS) with included battery, which is used in combination with a 24V power supply to bridge power failures. When the power supply provides sufficient voltages, the DC-UPS controller charges the battery. When the power supply voltage fails, the energy stored in the battery is released to the DC bus in a regulated process.
The UBC10.241-N1 device is the same as the UBC10.241 but without assembled batteries.

## Intended Use

This device is designed for installation in an enclosure and is intended for commercial use, such as in industrial control, process control, monitoring and measurement equipment or the like. Do not use this device in equipment where malfunction may cause severe personal injury or threaten human life.

## Installation Instructions

Turn power off and disconnect the battery fuse before working on the device.
Install the device in a cool area inside an enclosure providing protection against electrical, mechanical and fire hazards. Ensure sufficient ventilation by following the requirements of the EN 50272-2.
Install the device onto a DIN-rail according to EN 60715 with the input terminals on the top of the unit.
The input can be powered from a regulated power supply or a similar DC source. The voltage between the input and ground must not exceed 60Vdc continuously. The ripple voltage in the low frequency range between 50Hz and 10kHz must be negligible when used in marine applications.
The input must be powered from a PELV or SELV source or an “Isolated Secondary Circuit” in order to maintain a SELV or PELV output.
Use an appropriately sized 24V power supply, which can deliver the additional internal current consumption, required to charge the battery.
Use only VRLA lead acid batteries with a capacity between 4.5Ah and 6Ah.
Check for correct input and battery polarity. The device will not operate when the voltage is reversed.
Make sure that the wiring is correct by following all local and national codes. Use appropriate copper cables that are designed for a minimum operating temperature of 60°C. Ensure that all strands of a stranded wire enter the terminal connection.
The device is designed for pollution degree 2 areas in controlled environments. No condensation or frost is allowed.
The device is designed as “Class of Protection III” equipment according to IEC 61140.
The enclosure of the device provides a degree of protection of IP20.
A disconnecting means shall be provided for the output of the device.
The device is designed for convection cooling and does not require an external fan. Do not obstruct airflow and do not cover ventilation grid!
Keep the following minimum installation clearances: 40mm on top, 20mm on the bottom, 5mm left and right side. Increase the 5mm to 15mm in case the adjacent device is a heat source. When the device is permanently loaded with less than 50%, the 5mm can be reduced to zero.
The device is designed for altitudes up to 6000m (19685ft).
The maximum surrounding air temperature is +40°C (+104°F). The operational temperature is the same as the ambient or surrounding air temperature and is defined 2cm below the device.
The device is designed to operate in areas between 5% and 95% relative humidity.
Do not install the battery fuse until the installation work is complete.
To avoid an unintended buffering event disconnect the battery fuse or use the inhibit input.
Replacement fuses must be of the same type (ATOF® 287 030 from Littelfuse) or an UL listed fuse with the same nominal value and characteristics.
Do not store the device at temperatures higher than 25°C or performance and lifetime may change.
Before initial use, check the last charging which is marked on the battery. If it is older than 9 month, replace the battery.
Do not store batteries longer than 9 months without charging or performance and lifetime may change. Every 9 months or whenever the open circuit voltage (OCV) falls below 12.6V, the battery should be charged. Apply a charging voltage of 13.8V (at 25°C) for 72 hours. Batteries with an OCV below 12V must not be charged anymore and must be disposed.
Frequently charging below +5°C reduces the lifetime of the battery.
Do not use batteries other than the original batteries supplied by the manufacturer to avoid conflicts with agency approvals.
CAUTION: The unit contains wet cell batteries. Ventilation of the installation room in accordance with the rules of Canadian Electrical Code, part 1 is required if used in Canada.
**Instructions for replacement and disposal of batteries:**
Batteries need to be replaced periodically. The time interval depends on the ambient temperature in which the battery is used and on the number and depth of discharge cycles. In a typical application it is recommended to replace the batteries at least every 2 years. Disconnect battery fuse before replacing the batteries.
Always dispose batteries through a recycling organization. Optionally, batteries can be returned to the supplier or the battery manufacturer. Batteries must be completely discharged before recycling.

## Installation Instructions for Hazardous Location Areas

The device is suitable for use in Class I Division 2 Groups A, B, C, D locations and for use in Group II Category 3 (Zone 2) environments.
Hazardous Location Classification: ATEX: EPS 15 ATEX 1 025 X, II 3G EX ec nC IIC T3 Gc
**WARNING EXPLOSION HAZARDS!**
Substitution of components may impair suitability for this environment.
Do not disconnect the device, change unit settings or remove or insert the fuse unless power has been switched off or the area is known to be non-hazardous.
A suitable enclosure must be provided for the end product which has a minimum protection of IP23 and fulfils the requirements of the EN 60079-0. Sufficient ventilation must be ensured in the final installation.
Do not use batteries other than the original batteries supplied by the manufacturer or batteries, which are approved according to EN/ IEC 60079-7.

## Technical Data

All values are typical figures specified at 24Vdc input voltage, 10A output current in power supply mode at 25°C ambient, no charging and after a 5 minutes run-in time unless otherwise noted.

| | | |
|---|---|---|
| **Input voltage** | DC 24V | -20%/+25% |
| **Minimum input voltage to start charging and to enable battery mode** | 22.8Vdc | |
| **Transfer voltage to switch into battery mode** | 22.5Vdc | |
| **Internal current consumption** | 1.1A | Includes charging current |
| **Output in power supply mode:** | | |
| **Input to output voltage loss** | 230mV | At 10A output load |
| | 330mV | At 15A output load |
| **Output current** | 15A | Continuous |
| **Output in battery mode:** | | |
| **Output voltage** | 22.45V | At no output load |
| | 22.25V | At 10A output load |
| **Output current** | 10A | Continuous |
| | 15A | Short term, up to 5s |
| **Buffer time** | min. 13’24’’ | At 5A output current |
| | min. 4’54’’ | At 10A output current |
| | typ. 16’15’’ | At 5A output current |
| | typ. 6’15’’ | At 10A output current |
| | typ. 7h 35’ | At 0.2A output current |
| **Charging time** | 3h | For a fully discharged battery |
| **Power losses** | 5.5W | At 10A output load |
| **Temperature range** | 0°C to +40°C | |
| **Max. wire size (litz wire)** | 4mm² | For power terminals |
| **Wire size AWG** | AWG 20-10 | For power terminals |
| **Max. wire diameter** | 2.8mm | For power terminals |
| **Wire stripping length** | 10mm/ 0.4inch | For power terminals |
| **Max. wire size (litz wire)** | 1.5mm² | For signal terminals |
| **Wire size AWG** | AWG 22-14 | For signal terminals |
| **Max. wire diameter** | 1.5mm | For signal terminals |
| **Wire stripping length** | 6mm/ 0.25inch | For signal terminals |
| **Tightening torque** | 0.4Nm/ 3.5lb.inch | For signal terminals |
| **Size** (wxhxd) | 123x124x119mm | Without DIN-rail |
| **Weight** | 2850g / 6.28lb | |

## Functional Diagram

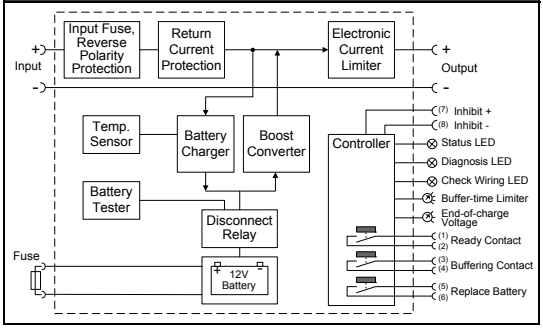


## Wiring Scheme

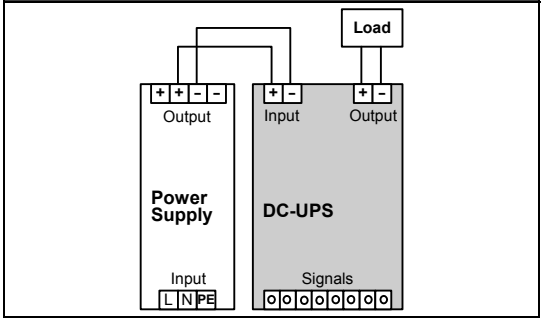

## Functional Description

The output is electronically protected against no-load, overload and short circuit and can supply any kind of loads, including unlimited inductive loads and capacitive loads.

Do not apply return voltages from the load to the output terminals higher than 35V.

**Green Status LED**

This LED is on solid, when the battery is charged more than 85%. During battery charging, the LED is flashing with a slow frequency and rapid flashing is an indication of a buffer event.

**Yellow Diagnoses LED**

This LED reports an overload situation, an expired buffer time (flashes for 15 minutes), an activated inhibit input or when the battery should be replaced.

**Red Check Wiring LED**

This LED indicates a failure in the installation such as too low input or battery voltage, incorrect wiring, blown or missing battery fuse.

**Buffer-time Limiter**

The buffer time during a buffer event can be set to 10s, 30s, 1min, 3min, 10min or infinity with the dial on the front. This can save battery energy for faster recharge and expand the lifetime of the battery. When dial is set to infinity, buffering continues until stopped by the battery deep-discharge protection.

**Inhibit Input**

The inhibit input disables or stops buffering. In power supply mode, a continuous input of 10-30V is required. During buffering, a short input of 10-30V for at least 250ms is required to stop buffering. The current of the inhibit input is limited to 6mA by the DC-UPS control unit.

**Ready, Buffering and Replace Battery Relay Contacts**

The Ready contact is closed when the battery is 85% charged and the unit is ready to buffer.
The Buffering contact is closed when the unit is in buffer mode.
The Replace Battery contact is closed when a battery replacement is necessary.
Contact ratings: 60Vdc 0.3A, 30Vdc 1A, 30Vac 0.5A for resistive loads.

**LED Signal Pattern**

**Green Status LED:**

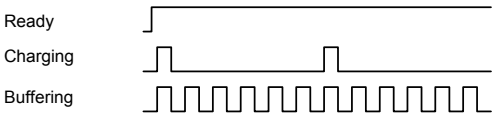


**Yellow Diagnosis LED:**

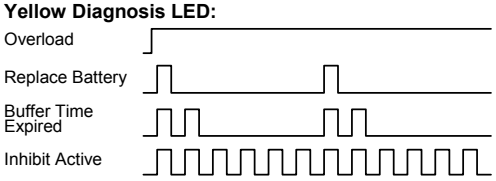


**Red Check Wiring LED:**

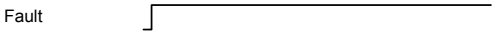


LRI Distribuída no Brasil pela LRI | vendas@lri.com.br | 51 2129-3000