EN	**QT40.241, QT40.242 Installation Manual**	**Power Supply 3-Phase, 24V, 40A, 960W**
DE	**QT40.241, QT40.242 Installationsanleitung**	**Stromversorgung 3-Phase, 24V, 40A, 960W**
FR	**QT40.241, QT40.242 Manuel d'installation**	**Alimentation d'Énergie 3-Phase, 24V, 40A, 960W**
ES	**QT40.241, QT40.242 Manual de instalación**	**Fuente De Alimentación 3-Phase, 24V, 40A, 960W**
IT	**QT40.241, QT40.242 Manuale di Installazione**	**Gruppo di alimentazione 3-Phase, 24V, 40A, 960W**
PT	**QT40.241, QT40.242 Manual de instalação**	**Fonte De Alimentação 3-Phase, 24V, 40A, 960W**

Doc. ID: PU-374.015.00-xxF (2024-05-07-AY1)



Read this first! — English

Before operating this device, please read this manual thoroughly and retain this manual for future reference! This device may only be installed and put into operation by qualified personnel. If damage or malfunction should occur during operation, immediately turn power off and send device to the factory for inspection. The device does not contain serviceable parts. The information presented in this document is believed to be accurate and reliable and may change without notice. For any clarifications the English translation will be used.

⚠ WARNING **Risk of electrical shock, fire, personal injury, or death:**

- Turn power off before working on the device. Protect against inadvertent re-powering.
- Do not open, modify or repair the device.
- Use caution to prevent any foreign objects from entering the housing.
- Do not use in wet locations or in areas where moisture or condensation can be expected.
- Do not touch during power-on and immediately after power-off. Hot surfaces may cause burns.

Vor Inbetriebnahme lesen! — Deutsch

Bitte lesen Sie diese Warnungen und Hinweise sorgfältig durch, bevor Sie das Gerät in Betrieb nehmen. Bewahren Sie die Anleitung zum Nachlesen auf. Das Gerät darf nur durch fachkundiges und qualifiziertes Personal installiert werden. Bei Funktionsstörungen oder Beschädigungen schalten Sie sofort die Versorgungsspannung ab und senden das Gerät zur Überprüfung ins Werk. Das Gerät beinhaltet keine Servicebauteile. Die angegebenen Daten dienen allein der Produktbeschreibung und sind nicht als zugesicherte Eigenschaften im Rechtssinne aufzufassen. Im Zweifelsfall gilt der englische Text.

⚠ WARNUNG **Missachtung nachfolgender Punkte kann einen elektrischen Schlag, Brände, schwere Unfälle oder Tod zur Folge haben:**

- Schalten Sie die Eingangsspannung vor Installations-, Wartungs- oder Änderungsarbeiten ab und sichern Sie diese gegen unbeabsichtigtes Wiedereinschalten.
- Führen Sie keine Änderungen oder Reparaturversuche am Gerät durch. Gerät nicht öffnen!
- Verhindern Sie das Eindringen von Fremdkörpern, wie z.B. Büroklammern und Metallteilen.
- Betreiben Sie das Gerät nicht in feuchter Umgebung oder in einer Umgebung, bei der mit Betauung oder Kondensation zu rechnen ist.
- Gehäuse nicht während des Betriebes oder kurz nach dem Abschalten berühren. Heiße Oberflächen können Verletzungen verursachen.

A lire avant mise sous tension! — Français

Veuillez lire ces instructions de montage et d'entretien avant de mettre l'alimentation sous tension. Conservez ce manuel qui vous sera toujours utile. Cette alimentation ne doit être installée que par du personnel qualifié et compétent. En cas de dommage ou dysfonctionnement, coupez immédiatement la tension d'alimentation et retournez l'appareil à l'usine pour vérification. ! L'alimentation ne contient pas de pièces échangeables Les données indiquées dans ce document servent uniquement à donner une description du produit et n'ont aucune valeur juridique. En cas de divergences, le texte anglais fait foi.

⚠ AVERTISSEMENT **Prendre en compte les points suivants, afin d'éviter toute détérioration électrique, incendie, dommage aux personnes ou mort:**

- Mettre l'alimentation hors tension avant toute intervention sur celle-ci et s'assurer qu'il n'y a pas risque de redémarrage.
- Ne pas ouvrir, modifier ou réparer l'alimentation.
- Veiller à ce qu'aucun objet ne rentre en contact avec l'intérieur de l'alimentation (trombones, pièces métalliques).
- Ne pas faire fonctionner l'appareil dans un environnement humide ou dans un environnement où il peut y avoir de la condensation.
- Ne pas toucher le carter pendant le fonctionnement ou directement après la mise hors tension. Surface chaude risquant d'entraîner des blessures.

Lea primero! — Español

Conserve este manual como referencia para futuras consultas. La fuente de alimentación solo puede ser instalada y puesta en funcionamiento por personal cualificado. Por favor lea detenidamente este manual antes de conectar la fuente de alimentación. Si se produce un fallo o mal funcionamiento durante la operación, desconecte inmediatamente la tensión de alimentación. En ambos casos, el equipo debe ser inspeccionado en fábrica. La información presentada en este documento es exacta y fiable en cuanto a la descripción del producto y puede cambiar sin aviso. En casa de duda, prevalece el texto inglés.

⚠ ADVERTENCI A **Riesgo de descarga eléctrica, incendio, accidente grave o muerte:**

- Desconectar la tensión de red antes de trabajar en la fuente de alimentación. Evite una posible reconexión involuntaria.
- No realizar ninguna modificación o reparación de la unidad. No abrir la unidad.
- Evitar la introducción en la carcasa de objetos extraños.
- No usar el equipo en ambientes húmedos. No operar el equipo en ambientes donde se espere la formación de rocío o condensación.
- No tocar durante el funcionamiento ni inmediatamente después del apagado. El calor de la superficie puede causar quemaduras graves.

Leggere prima questa parte! — Italiano

Prima di collegare il sistema di alimentazione elettrica si prega di leggere attentamente le seguenti avvertenze. Conservare le istruzioni per la consultazione futura. Il sistema di alimentazione elettrica deve essere installato solo da personale competente e qualificato. Se durante il funzionamento si verificano anomalie o guasti, scollegare immediatamente la tensione di alimentazione. In entrambi i casi è necessario far controllare l'apparecchio dal produttore! I dati sono indicati solo a scopo descrittivo del prodotto e non vanno considerati come caratteristiche garantite dell'apparecchio. In caso di differenze o problemi è valido il testo inglese

⚠ AVVERTENZ A **Il mancato rispetto delle seguenti norme può provocare folgorazione elettrica, incendi, gravi incidenti e perfino la morte:**

- Prima di eseguire interventi di installazione, di manutenzione o di modifica scollegare la tensione di rete ed adottare tutti i provvedimenti necessari per impedirne il ricollegamento non intenzionale.
- Non tentare di aprire, di modificare o di riparare da soli l'apparecchio.
- Impedire la penetrazione di corpi estranei nell'apparecchio, ad esempio fermagli o altri oggetti metallici.
- Non far funzionare l'apparecchio in un ambiente umido. Non far funzionare l'apparecchio in un ambiente soggetto alla formazione di condensa o di rugiada.
- Non toccare quando acceso e subito dopo lo spegnimento. La superficie calda può causare scottature.

Leia primeiro! — Português

Recomendamos a leitura cuidadosa das seguintes advertências e observações, antes de colocar em funcionamento a fonte de alimentação. Guarde as Instruções para futura consulta, em casos de dúvida. A fonte de alimentação deverá ser instalada apenas por profissionais da área, tecnicamente qualificados. Se por acaso, durante a utilização ocorrer algum defeito de funcionamento ou dano, desligue imediatamente a tensão de alimentação. Em ambos os casos, será necessária uma verificação na Fábrica! Os dados mencionados têm como finalidade somente a descrição do produto, e não devem ser interpretados como propriedades garantidas no sentido jurídico. Em caso de duvidas aplica-se o texto em inglês.

⚠ ATENÇÃO **A não observância ou o incumprimento dos pontos a seguir mencionados, poderá causar uma descarga elétrica, incêndios, acidentes graves ou morte:**

- Antes de trabalhos de instalação, manutenção ou modificação, desligue a tensão de alimentação, protegendo-a contra uma nova ligação involuntária.
- Não efectue nenhuma modificação ou tentativa de reparação no aparelho. Quando necessário contacte o seu distribuidor. Não abra o aparelho.
- Proteger a fonte de alimentação contra a introdução inadvertida de corpos metálicos, como por ex., clipes ou outras peças de metal.
- Não usar o aparelho em ambientes húmidos. Não usar o aparelho em ambientes propensos a condensações.
- Não tocar enquanto estiver em funcionamento, nem após a desligar. A superficie poderá estar quente e provocar lesões.

Headquarters: PULS GmbH, Elektrastr. 6, 81925 Munich, Germany www.pulspower.com

Germany +49 89 9278 0 **France** +33 478 668 941 **Austria** +43 2764 3213 **Switzerland** +41 56 450 18 10
China +86 512 62881820 **North America** +1 630 587 9780 **Singapore** +65 6684 2310 **United Kingdom** +44 1525 841001

The information in this document is believed to be accurate and reliable and may change without notice.

LRI Distribuída no Brasil pela LRI | vendas@lri.com.br | 51 2129-3000

Product Description

The QT40.241 is a DIN rail mountable power supply for three-phase mains systems, which provides a floating, stabilized and galvanically separated SELV/PELV output voltage.

The QT40.242 is the extra long-life version of the QT40.241.

Intended Use

This device is designed for installation in an enclosure and is intended for commercial use, such as in industrial control, process control, monitoring, measurement equipment or the like.

Do not use this device in equipment, where malfunctioning may cause severe personal injury or threaten human life without additional appropriate safety devices, that are suited for the end-application.

If this device is used in a manner outside of its specification, the protection provided by the device may be impaired.

Installation Instructions

Install device in an enclosure providing protection against electrical, mechanical and fire hazards.

Install the device onto a DIN-rail according to EN 60715 with the input terminals on the bottom of the device. Other mounting orientations require a reduction in output current.

Make sure that the wiring is correct by following all local and national codes. Use appropriate copper cables that are designed for a minimum operating temperature of 60°C for ambient temperatures up to +45°C, 75°C for ambient temperatures up to +60°C and 90°C for ambient temperatures up to +70°C. Ensure that all strands of a stranded wire enter the terminal connection. Use ferrules for wires on the input terminals. Unused screw terminals should be securely tightened.

The device is designed for pollution degree 2 areas in controlled environments. No condensation or frost is allowed.

The enclosure of the device provides a degree of protection of IP20. The enclosure does not provide protection against spilled liquids.

The device is designed for overvoltage category II zones. Below 4000m altitude the device is tested for impulse withstand voltages up to 4kV, which corresponds to OVC III according to IEC 60664-1.

The device is designed as “Class of Protection I” equipment according to IEC 61140. Do not use without a proper PE (Protective Earth) connection.

The device is suitable to be supplied from TN, TT or IT mains networks, grounding of one phase is allowed. The continuous voltage between the input terminals and the PE potential must not exceed 528Vac.

A disconnecting means shall be provided for the input of the device.

The device is designed for convection cooling and does not require an external fan. Do not obstruct airflow and do not cover ventilation grid!

The device is designed for altitudes up to 5000m. Above 2000m a reduction in output current is required.

Keep the following minimum installation clearances: 40mm on top, 20mm on the bottom, 5mm left and right side. Increase the 5mm to 15mm in case the adjacent device is a heat source. When the device is permanently loaded with less than 50%, the 5mm can be reduced to zero.

The device is designed, tested and approved for branch circuits up to 32A (IEC) and 30A (UL) without additional protection device. If an external fuse is utilized, do not use circuit breakers smaller than 6A B- or C-Characteristic to avoid a nuisance tripping of the circuit breaker.

The maximum surrounding air temperature is +70°C. The operational temperature is the same as the ambient or surrounding air temperature and is defined 2cm below the device.

The device is designed to operate in areas between 5% and 95% relative humidity.

Functional Description

The output is electronically protected against no-load, overload and short circuit and can supply any kind of loads, including unlimited inductive or capacitive loads.

Do not apply return voltages from the load to the output terminals higher than 35V.

The output voltage can be adjusted with a small flat-blade screwdriver behind the flap on the front.

The green DC-OK LED reports an output voltage above 90% of the adjusted voltage of a running device.

The DC-OK relay monitors the output voltage and the contact is closed when the DC-OK LED is on. Contact ratings: 60Vdc 0.3A, 30Vdc 1A, 30Vac 0.5A for resistive loads.

The red overload LED is on when the output voltage falls below 90% of the adjusted value or in case of a short circuit in the output. The LED is flashing, when the device has switched off due to over-temperature or when the “Remote OFF” signal is activated. Input voltage is required.

The device is equipped with an over-temperature protection. In case of a high temperature, the output shuts down and starts automatically again after cooling off.

Devices can be paralleled to increase the output power. The ambient temperature is not allowed to exceed +60°C. The output voltage of all devices shall be adjusted to the same value (±100mV) in “Single Use” mode with the same load conditions on all units, or the units can be left with the factory settings. After the adjustments, set the unit to “Parallel Use” mode, in order to achieve load sharing. The “Parallel Use” mode regulates the output voltage in such a manner that the voltage at no load is approx. 4% higher than at nominal load. If more than three devices are connected in parallel, a diode, fuse or circuit breaker with a rating of 50 or 63A is required on each output.

Same devices can be connected in series for higher output voltages. It is allowed to connect as many devices in series as needed, providing the sum of the output voltage does not exceed 150Vdc.

In case of an internal defect, a redundant circuit limits the maximum output voltage to 32V. The output shuts down and automatically attempts to restart.

The device is equipped with a remote ON/OFF function to turn the output off. For this connect pin 15 with pin 16.

The output voltage can be remotely adjusted between 14 and 28Vdc by applying a control voltage between pin 15 and the (-) terminal. See product datasheet for details.

Technical Data

All values are typical figures specified at 3x 400Vac 50Hz input voltage, symmetrical phase voltages, 24V, 40A output load, 25°C ambient temperature and after a 5 minutes run-in time unless otherwise noted.

Output voltage	DC 24V	Nominal
Adjustment range	24 – 28Vdc	Factory setting 24.1V
Output current	40 – 34.3A	Below +60°C ambient
	30 – 25.7A	At +70°C ambient
	Short-term, up to 4s:	
	60 – 51.5A	Below +70°C ambient
	Derate linearly between +60°C and +70°C	
Input voltage AC	3AC 380 - 480V	-15% / +10%
	3AC 480V	+20%, max. 5s
Mains frequency	50 – 60Hz	±6%
Input current AC	1.58 / 1.3A	At 3x400 / 480Vac
Power factor	0.92 / 0.93	At 3x400 / 480Vac
Input inrush current	4.5 / 4.5$_{Apeak}$	At 3x400 / 480Vac, temp. independent
Efficiency	95.3 / 95.2%	At 3x400 / 480Vac
Power losses	47.3 / 48.4W	At 3x400 / 480Vac
Hold-up time	25 / 25ms	At 3x400 / 480Vac
Temperature range	-25 to +70°C	
Max. wire size (litz wire)	4mm²	For input terminals
Wire size AWG	AWG 20-10	For input terminals
Max. wire diameter	2.8mm	For input terminals
Wire stripping length	7mm	For input terminals
Tightening torque	0.8Nm	For input terminals
Max. wire size (litz wire)	10mm²	For output terminals
Wire size AWG	AWG 22-8	For output terminals
Max. wire diameter	5.2mm	For output terminals
Wire stripping length	12mm	For output terminals
Tightening torque	2Nm	For output terminals
Max. wire size (litz wire)	1.5mm²	For signal terminals
Wire size AWG	AWG 26-14	For signal terminals
Max. wire diameter	1.5mm	For signal terminals
Wire stripping length	7mm	For signal terminals
Size (wxhxd)	110x124x127mm	Without DIN rail
Weight	1500g	

Functional Diagram

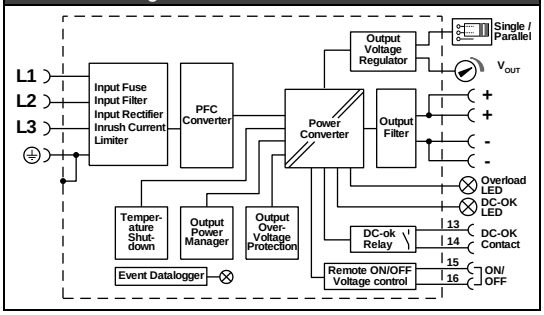

Output Characteristic

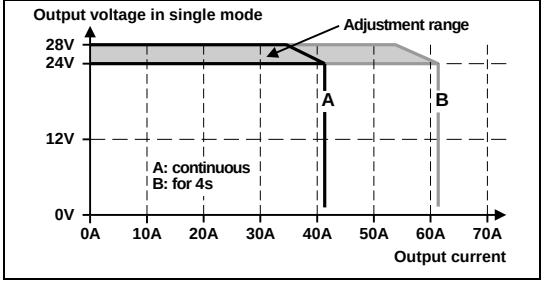

Temperature Range

