| | | |
|---|---|---|
| **EN** | **QS40.484 Installation Manual** | **Power Supply 1-Phase, 48V, 20A, 960W** |
| **DE** | **QS40.484 Installationsanleitung** | **Stromversorgung 1-Phase, 48V, 20A, 960W** |
| **FR** | **QS40.484 Manuel d'installation** | **Alimentation d'Énergie 1-Phase, 48V, 20A, 960W** |
| **ES** | **QS40.484 Manual de instalación** | **Fuente De Alimentación 1-Phase, 48V, 20A, 960W** |
| **IT** | **QS40.484 Manuale di Installazione** | **Gruppo di alimentazione 1-Phase, 48V, 20A, 960W** |
| **PT** | **QS40.484 Manual de instalação** | **Fonte De Alimentação 1-Phase, 48V, 20A, 960W** |

Doc. ID: PU-364.015.06-xxB (2020-02-10-MR1)




## Read this first! — English

Before operating this device, please read this manual thoroughly and retain this manual for future reference! This device may only be installed and put into operation by qualified personnel. If damage or malfunction should occur during operation, immediately turn power off and send device to the factory for inspection. The device does not contain serviceable parts. The information presented in this document is believed to be accurate and reliable and may change without notice. For any clarifications the English translation will be used.

**⚠ WARNING** **Risk of electrical shock, fire, personal injury, or death:**

- Turn power off before working on the device. Protect against inadvertent re-powering.
- Do not open, modify or repair the device.
- Use caution to prevent any foreign objects from entering the housing.
- Do not use in wet locations or in areas where moisture or condensation can be expected.
- Do not touch during power-on and immediately after power-off. Hot surfaces may cause burns.

## Vor Inbetriebnahme lesen! — Deutsch

Bitte lesen Sie diese Warnungen und Hinweise sorgfältig durch, bevor Sie das Gerät in Betrieb nehmen. Bewahren Sie die Anleitung zum Nachlesen auf. Das Gerät darf nur durch fachkundiges und qualifiziertes Personal installiert werden. Bei Funktionsstörungen oder Beschädigungen schalten Sie sofort die Versorgungsspannung ab und senden das Gerät zur Überprüfung ins Werk. Das Gerät beinhaltet keine Servicebauteile. Die angegebenen Daten dienen allein der Produktbeschreibung und sind nicht als zugesicherte Eigenschaften im Rechtssinne aufzufassen. Im Zweifelsfall gilt der englische Text.

**⚠ WARNUNG** **Missachtung nachfolgender Punkte kann einen elektrischen Schlag, Brände, schwere Unfälle oder Tod zur Folge haben:**

- Schalten Sie die Eingangsspannung vor Installations-, Wartungs- oder Änderungsarbeiten ab und sichern Sie diese gegen unbeabsichtigtes Wiedereinschalten.
- Führen Sie keine Änderungen oder Reparaturversuche am Gerät durch. Gerät nicht öffnen!
- Verhindern Sie das Eindringen von Fremdkörpern, wie z.B. Büroklammern und Metallteilen.
- Betreiben Sie das Gerät nicht in feuchter Umgebung oder in einer Umgebung, bei der mit Betauung oder Kondensation zu rechnen ist.
- Gehäuse nicht während des Betriebes oder kurz nach dem Abschalten berühren. Heiße Oberflächen können Verletzungen verursachen.

## A lire avant mise sous tension! — Français

Veuillez lire ces instructions de montage et d'entretien avant de mettre l'alimentation sous tension. Conservez ce manuel qui vous sera toujours utile. Cette alimentation ne doit être installée que par du personnel qualifié et compétent. En cas de dommage ou dysfonctionnement, coupez immédiatement la tension d'alimentation et retournez l'appareil à l'usine pour vérification. ! L'alimentation ne contient pas de pièces échangeables Les données indiquées dans ce document servent uniquement à donner une description du produit et n'ont aucune valeur juridique. En cas de divergences, le texte anglais fait foi.

**⚠ AVERTISSEMENT** **Prendre en compte les points suivants, afin d'éviter toute détérioration électrique, incendie, dommage aux personnes ou mort:**

- Mettre l'alimentation hors tension avant toute intervention sur celle-ci et s'assurer qu'il n'y a pas risque de redémarrage.
- Ne pas ouvrir, modifier ou réparer l'alimentation.
- Veiller à ce qu'aucun objet ne rentre en contact avec l'intérieur de l'alimentation (trombones, pièces métalliques).
- Ne pas faire fonctionner l'appareil dans un environnement humide ou dans un environnement où il peut y avoir de la condensation.
- Ne pas toucher le carter pendant le fonctionnement ou directement après la mise hors tension. Surface chaude risquant d'entraîner des blessures.

## Lea primero! — Español

Conserve este manual como referencia para futuras consultas. La fuente de alimentación solo puede ser instalada y puesta en funcionamiento por personal cualificado. Por favor lea detenidamente este manual antes de conectar la fuente de alimentación. Si se produce un fallo o mal funcionamiento durante la operación, desconecte inmediatamente la tensión de alimentación. En ambos casos, el equipo debe ser inspeccionado en fábrica. La información presentada en este documento es exacta y fiable en cuanto a la descripción del producto y puede cambiar sin aviso. En casa de duda, prevalece el texto inglés.

**⚠ ADVERTENCIA** **Riesgo de descarga eléctrica, incendio, accidente grave o muerte:**

- Desconectar la tensión de red antes de trabajar en la fuente de alimentación. Evite una posible reconexión involuntaria.
- No realizar ninguna modificación o reparación de la unidad. No abrir la unidad.
- Evitar la introducción en la carcasa de objetos extraños.
- No usar el equipo en ambientes húmedos. No operar el equipo en ambientes donde se espere la formación de rocío o condensación.
- No tocar durante el funcionamiento ni inmediatamente después del apagado. El calor de la superficie puede causar quemaduras graves.

## Leggere prima questa parte! — Italiano

Prima di collegare il sistema di alimentazione elettrica si prega di leggere attentamente le seguenti avvertenze. Conservare le istruzioni per la consultazione futura. Il sistema di alimentazione elettrica deve essere installato solo da personale competente e qualificato. Se durante il funzionamento si verificano anomalie o guasti, scollegare immediatamente la tensione di alimentazione. In entrambi i casi è necessario far controllare l'apparecchio dal produttore! I dati sono indicati solo a scopo descrittivo del prodotto e non vanno considerati come caratteristiche garantite dell'apparecchio. In caso di differenze o problemi è valido il testo inglese

**⚠ AVVERTENZA** **Il mancato rispetto delle seguenti norme può provocare folgorazione elettrica, incendi, gravi incidenti e perfino la morte:**

- Prima di eseguire interventi di installazione, di manutenzione o di modifica scollegare la tensione di rete ed adottare tutti i provvedimenti necessari per impedirne il ricollegamento non intenzionale.
- Non tentare di aprire, di modificare o di riparare da soli l'apparecchio.
- Impedire la penetrazione di corpi estranei nell'apparecchio, ad esempio fermagli o altri oggetti metallici.
- Non far funzionare l'apparecchio in un ambiente umido. Non far funzionare l'apparecchio in un ambiente soggetto alla formazione di condensa o di rugiada.
- Non toccare quando acceso e subito dopo lo spegnimento. La superficie calda può causare scottature.

## Leia primeiro! — Português

Recomendamos a leitura cuidadosa das seguintes advertências e observações, antes de colocar em funcionamento a fonte de alimentação. Guarde as Instruções para futura consulta, em casos de dúvida. A fonte de alimentação deverá ser instalada apenas por profissionais da área, tecnicamente qualificados. Se por acaso, durante a utilização ocorrer algum defeito de funcionamento ou dano, desligue imediatamente a tensão de alimentação. Em ambos os casos, será necessária uma verificação na Fábrica! Os dados mencionados têm como finalidade somente a descrição do produto, e não devem ser interpretados como propriedades garantidas no sentido jurídico. Em caso de duvidas aplica-se o texto em inglês.

**⚠ ATENÇÃO** **A não observância ou o incumprimento dos pontos a seguir mencionados, poderá causar uma descarga elétrica, incêndios, acidentes graves ou morte:**

- Antes de trabalhos de instalação, manutenção ou modificação, desligue a tensão de alimentação, protegendo-a contra uma nova ligação involuntária.
- Não efectue nenhuma modificação ou tentativa de reparação no aparelho. Quando necessário contacte o seu distribuidor. Não abra o aparelho.
- Proteger a fonte de alimentação contra a introdução inadvertida de corpos metálicos, como por ex., clipes ou outras peças de metal.
- Não usar o aparelho em ambientes húmidos. Não usar o aparelho em ambientes propensos a condensações.
- Não tocar enquanto estiver em funcionamento, nem após a desligar. A superficie poderá estar quente e provocar lesões.

**Headquarters:** PULS GmbH, Elektrastr. 6, 81925 Munich, Germany, www.pulspower.com

| | | | | | | | |
|---|---|---|---|---|---|---|---|
| **Germany** | +49 89 9278 0 | **France** | +33 478 668 941 | **Austria** | +43 2764 3213 | **Switzerland** | +41 56 450 18 10 |
| **China** | +86 512 62881820 | **North America** | +1 630 587 9780 | **Singapore** | +65 6684 2310 | **United Kingdom** | +44 1525 841001 |

The information in this document is believed to be accurate and reliable and may change without notice.

LRI Distribuída no Brasil pela LRI | vendas@lri.com.br | 51 2129-3000

## Product Description

The QS40.484 is a DIN-rail mountable single-phase-input power supply, which provides a floating, stabilized and galvanically separated SELV/PELV output voltage.

## Intended Use

This device is designed for installation in an enclosure and is intended for commercial use, such as in industrial control, process control, monitoring and measurement equipment or the like.

Do not use this device in equipment, where malfunctioning may cause severe personal injury or threaten human life without additional appropriate safety devices, that are suited for the end-application.

If this device is used in a manner outside of its specification, the protection provided by the device may be impaired.

## Installation Instructions

Install device in an enclosure providing protection against electrical, mechanical and fire hazards.

Install the device onto a DIN-rail according to EN 60715 with the input terminals on the bottom of the device. Other mounting orientations require a reduction in output current.

Make sure that the wiring is correct by following all local and national codes. Use appropriate copper cables that are designed for a minimum operating temperature of 60°C for ambient temperatures up to +45°C, 75°C for ambient temperatures up to +60°C and 90°C for ambient temperatures up to +70°C. Ensure that all strands of a stranded wire enter the terminal connection. Unused screw terminals should be securely tightened. Use ferrules for wires on the input terminals.

The device is designed for pollution degree 2 areas in controlled environments. No condensation or frost is allowed.

The enclosure of the device provides a degree of protection of IP20. The enclosure does not provide protection against spilled liquids.

The device is designed for overvoltage category II zones.

The device is designed as “Class of Protection I” equipment according to IEC 61140. Do not use without a proper PE (Protective Earth) connection.

The device is suitable to be supplied from TN, TT or IT mains networks. The continuous voltage between the input terminal and the PE potential must not exceed 276Vac.

A disconnecting means shall be provided for the input of the device.

The device is designed for convection cooling and does not require an external fan. Do not obstruct airflow and do not cover ventilation grid!

The device is designed for altitudes up to 4000m (13125ft). Above 2000m (6560ft) a reduction in output current is required.

Keep the following minimum installation clearances: 40mm on top, 20mm on the bottom, 5mm left and right side. Increase the 5mm to 15mm in case the adjacent device is a heat source. When the device is permanently loaded with less than 50%, the 5mm can be reduced to zero.

The device is designed, tested and approved for branch circuits up to 30A (UL) and 32A (IEC) without additional protection device. If an external fuse is utilized, do not use circuit breakers smaller than 10A B- or 8A C-Characteristic to avoid a nuisance tripping of the circuit breaker.

The maximum surrounding air temperature is +70°C (+158°F). The operational temperature is the same as the ambient or surrounding air temperature and is defined 2cm below the device.

The device is designed to operate in areas between 5% and 95% relative humidity.

## Functional Description

The output is electronically protected against no-load, overload and short circuit and can supply any kind of loads, including unlimited inductive or capacitive loads. If capacitors with a capacitance >1F are connected, the unit might charge the capacitor in an intermittent mode.

Do not apply return voltages from the load to the output terminals higher than 63V.

The output voltage can be adjusted with a small flat-blade screwdriver behind the flap on the front.

The green DC OK LED reports an output voltage above 90% of the adjusted voltage of a running device.

The DC OK relay monitors the output voltage and the contact is closed when the DC OK LED is on. Contact ratings: 60Vdc 0.3A, 30Vdc 1A, 30Vac 0.5A for resistive loads.

The red overload LED is on when the output voltage falls below 90% of the adjusted value. The LED is flashing, when the device is in overload or short circuit mode or has switched off due to over-temperature or when the “Remote OFF” signal is activated. Input voltage is required.

The device is equipped with an over-temperature protection. In case of a high temperature, the output shuts down and starts automatically again after cooling off.

At heavy overloads (when output voltage falls below 40V), the device delivers continuous output current for 2 to 4s (depending on the overload). After this, the output is switched off for approximately 17s before a new start attempt is automatically performed. This cycle is repeated as long as the overload exists.

Devices can be paralleled to increase the output power. The ambient temperature is not allowed to exceed +60°C. The output voltage of all devices shall be adjusted to the same value (±100mV) in “Single Use” mode with the same load conditions on all units, or the units can be left with the factory settings. After the adjustments, set the unit to “Parallel Use” mode, in order to achieve load sharing. The “Parallel Use” mode regulates the output voltage in such a manner that the voltage at no load is approx. 4% higher than at nominal load. Energize all units at the same time. It also might be necessary to cycle the input power (turn-off for at least five seconds), if the output was in overload or short circuit. If more than three devices are connected in parallel, a diode, fuse or circuit breaker with a rating of 30A or 32A is required on each output.

Same devices can be connected in series for higher output voltages. It is allowed to connect as many devices in series as needed, providing the sum of the output voltage does not exceed 150Vdc.

In case of an internal defect, a redundant circuit limits the maximum output voltage to 60V. The output shuts down and automatically attempts to restart.

The device is equipped with a remote ON/OFF function to turn the output off. For this connect pin 15 with pin 16.

### Technical Data

All values are typical figures specified at 230Vac 50Hz input voltage, 48V, 20A output load, 25°C ambient temperature and after a 5 minutes run-in time unless otherwise noted.

| | | |
|---|---|---|
| **Output voltage** | DC 48V | Nominal |
| **Adjustment range** | 48 – 54Vdc | Factory setting 48V |
| **Output current** | Continuous: | |
| | 20 – 17.8A | Below +60°C ambient |
| | 15 – 13.4A | At +70°C ambient |
| | Short-term, up to 4s: | |
| | 30 – 26.7A | Below +70°C ambient |
| | Derate linearly between +60°C and +70°C | |
| **Input voltage AC** | AC 200 - 240V | -15% / +10% |
| **Mains frequency** | 50 – 60Hz | ±6% |
| **Input current AC** | 4.6A | |
| **Power factor** | 0.96 | |
| **Input inrush current** | 14A pk | Temp. independent |
| **Efficiency** | 95.0% | |
| **Power losses** | 50.5W | |
| **Hold-up time** | 30ms | |
| **Temperature range** | -25 to +70°C | |
| **Max. wire size (litz wire)** | 4mm² | For input terminals |
| **Wire size AWG** | AWG 20-10 | For input terminals |
| **Max. wire diameter** | 2.8mm | For input terminals |
| **Wire stripping length** | 7mm / 0.28inch | For input terminals |
| **Tightening torque** | 1Nm / 9lb.inch | For input terminals |
| **Max. wire size (litz wire)** | 10mm² | For output terminals |
| **Wire size AWG** | AWG 22-8 | For output terminals |
| **Max. wire diameter** | 5.2mm | For output terminals |
| **Wire stripping length** | 12mm / 0.5inch | For output terminals |
| **Tightening torque** | 2.3Nm / 20lb.inch | For output terminals |
| **Max. wire size (litz wire)** | 1.5mm² | For signal terminals |
| **Wire size AWG** | AWG 26-14 | For signal terminals |
| **Max. wire diameter** | 1.5mm | For signal terminals |
| **Wire stripping length** | 7mm / 0.28inch | For signal terminals |
| **Size** (wxhxd) | 125x124x127mm | Without DIN-rail |
| **Weight** | 1800g / 3.97lb | |

### Functional Diagram

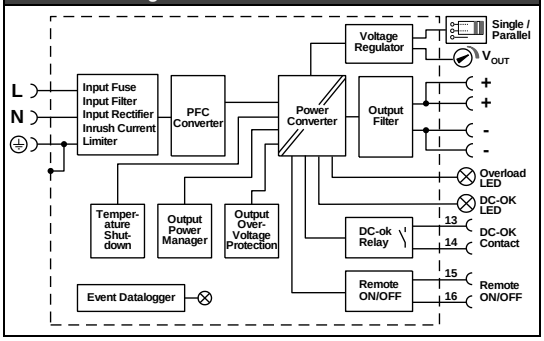


### Output Characteristic

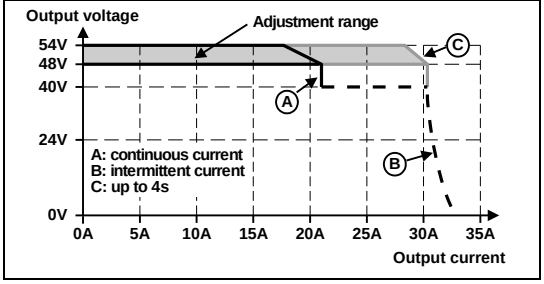


### Temperature Range

