EN	**PISA11.410 Installation Manual**	**Electronic Fuse Module 24V, 4 x 10A**
DE	**PISA11.410 Installationsanleitung**	**Elektronisches Sicherungsmodul 24V, 4 x 10A**
FR	**PISA11.410 Manuel d'installation**	**Module de protection électronique 24V, 4 x 10A**
ES	**PISA11.410 Manual de instalación**	**Módulo de fusible electrónico 24V, 4 x 10A**
IT	**PISA11.410 Manuale di Installazione**	**Modulo protezione elettronica 24V, 4 x 10A**
PT	**PISA11.410 Manual de instalação**	**Módulo de fusível eletrónico 24V, 4 x 10A**

Doc. ID: PU-399.015.03-xxB (2026-01-15-DB2)
Material number: 500007967-0B-00
DIR number: 31801
DIR version: 02

Read this first! — English

Before operating this device, please read this manual thoroughly and retain this manual for future reference! This device may only be installed and put into operation by qualified personnel. If damage or malfunction should occur during operation, immediately turn power off and send device to the factory for inspection. The device does not contain serviceable parts. The information presented in this document is believed to be accurate and reliable and may change without notice. For any clarifications the English translation will be used.

⚠ WARNING **Risk of electrical shock, fire, personal injury, or death:**

- Turn power off before working on the device. Protect against inadvertent re-powering.
- Do not open, modify or repair the device.
- Use caution to prevent any foreign objects from entering the housing.
- Do not use in wet locations or in areas where moisture or condensation can be expected.
- Do not touch during power-on and immediately after power-off. Hot surfaces may cause burns.

Vor Inbetriebnahme lesen! — Deutsch

Bitte lesen Sie diese Warnungen und Hinweise sorgfältig durch, bevor Sie das Gerät in Betrieb nehmen. Bewahren Sie die Anleitung zum Nachlesen auf. Das Gerät darf nur durch fachkundiges und qualifiziertes Personal installiert werden. Bei Funktionsstörungen oder Beschädigungen schalten Sie sofort die Versorgungsspannung ab und senden das Gerät zur Überprüfung ins Werk. Das Gerät beinhaltet keine Servicebauteile. Die angegebenen Daten dienen allein der Produktbeschreibung und sind nicht als zugesicherte Eigenschaften im Rechtssinne aufzufassen. Im Zweifelsfall gilt der englische Text.

⚠ WARNUNG **Missachtung nachfolgender Punkte kann einen elektrischen Schlag, Brände, schwere Unfälle oder Tod zur Folge haben:**

- Schalten Sie die Eingangsspannung vor Installations-, Wartungs- oder Änderungsarbeiten ab und sichern Sie diese gegen unbeabsichtigtes Wiedereinschalten.
- Führen Sie keine Änderungen oder Reparaturversuche am Gerät durch. Gerät nicht öffnen!
- Verhindern Sie das Eindringen von Fremdkörpern, wie z.B. Büroklammern und Metallteilen.
- Betreiben Sie das Gerät nicht in feuchter Umgebung oder in einer Umgebung, bei der mit Betauung oder Kondensation zu rechnen ist.
- Gehäuse nicht während des Betriebes oder kurz nach dem Abschalten berühren. Heiße Oberflächen können Verletzungen verursachen.

A lire avant mise sous tension! — Français

Veuillez lire ces instructions de montage et d'entretien avant de mettre l'alimentation sous tension. Conservez ce manuel qui vous sera toujours utile. Cette alimentation ne doit être installée que par du personnel qualifié et compétent. En cas de dommage ou dysfonctionnement, coupez immédiatement la tension d'alimentation et retournez l'appareil à l'usine pour vérification. ! L'alimentation ne contient pas de pièces échangeables Les données indiquées dans ce document servent uniquement à donner une description du produit et n'ont aucune valeur juridique. En cas de divergences, le texte anglais fait foi.

⚠ AVERTISSEMENT **Prendre en compte les points suivants, afin d'éviter toute détérioration électrique, incendie, dommage aux personnes ou mort:**

- Mettre l'alimentation hors tension avant toute intervention sur celle-ci et s'assurer qu'il n'y a pas risque de redémarrage.
- Ne pas ouvrir, modifier ou réparer l'alimentation.
- Veiller à ce qu'aucun objet ne rentre en contact avec l'intérieur de l'alimentation (trombones, pièces métalliques).
- Ne pas faire fonctionner l'appareil dans un environnement humide ou dans un environnement où il peut y avoir de la condensation.
- Ne pas toucher le carter pendant le fonctionnement ou directement après la mise hors tension. Surface chaude risquant d'entraîner des blessures.

Lea primero! — Español

Conserve este manual como referencia para futuras consultas. La fuente de alimentación solo puede ser instalada y puesta en funcionamiento por personal cualificado. Por favor lea detenidamente este manual antes de conectar la fuente de alimentación. Si se produce un fallo o mal funcionamiento durante la operación, desconecte inmediatamente la tensión de alimentación. En ambos casos, el equipo debe ser inspeccionado en fábrica. La información presentada en este documento es exacta y fiable en cuanto a la descripción del producto y puede cambiar sin aviso. En casa de duda, prevalece el texto inglés.

⚠ ADVERTENCI A **Riesgo de descarga eléctrica, incendio, accidente grave o muerte:**

- Desconectar la tensión de red antes de trabajar en la fuente de alimentación. Evite una posible reconexión involuntaria.
- No realizar ninguna modificación o reparación de la unidad. No abrir la unidad.
- Evitar la introducción en la carcasa de objetos extraños.
- No usar el equipo en ambientes húmedos. No operar el equipo en ambientes donde se espere la formación de rocío o condensación.
- No tocar durante el funcionamiento ni inmediatamente después del apagado. El calor de la superficie puede causar quemaduras graves.

Leggere prima questa parte! — Italiano

Prima di collegare il sistema di alimentazione elettrica si prega di leggere attentamente le seguenti avvertenze. Conservare le istruzioni per la consultazione futura. Il sistema di alimentazione elettrica deve essere installato solo da personale competente e qualificato. Se durante il funzionamento si verificano anomalie o guasti, scollegare immediatamente la tensione di alimentazione. In entrambi i casi è necessario far controllare l'apparecchio dal produttore! I dati sono indicati solo a scopo descrittivo del prodotto e non vanno considerati come caratteristiche garantite dell'apparecchio. In caso di differenze o problemi è valido il testo inglese

⚠ AVVERTENZ A **Il mancato rispetto delle seguenti norme può provocare folgorazione elettrica, incendi, gravi incidenti e perfino la morte:**

- Prima di eseguire interventi di installazione, di manutenzione o di modifica scollegare la tensione di rete ed adottare tutti i provvedimenti necessari per impedirne il ricollegamento non intenzionale.
- Non tentare di aprire, di modificare o di riparare da soli l'apparecchio.
- Impedire la penetrazione di corpi estranei nell'apparecchio, ad esempio fermagli o altri oggetti metallici.
- Non far funzionare l'apparecchio in un ambiente umido. Non far funzionare l'apparecchio in un ambiente soggetto alla formazione di condensa o di rugiada.
- Non toccare quando acceso e subito dopo lo spegnimento. La superficie calda può causare scottature.

Leia primeiro! — Português

Recomendamos a leitura cuidadosa das seguintes advertências e observações, antes de colocar em funcionamento a fonte de alimentação. Guarde as Instruções para futura consulta, em casos de dúvida. A fonte de alimentação deverá ser instalada apenas por profissionais da área, tecnicamente qualificados. Se por acaso, durante a utilização ocorrer algum defeito de funcionamento ou dano, desligue imediatamente a tensão de alimentação. Em ambos os casos, será necessária uma verificação na Fábrica! Os dados mencionados têm como finalidade somente a descrição do produto, e não devem ser interpretados como propriedades garantidas no sentido jurídico. Em caso de duvidas aplica-se o texto em inglês.

⚠ ATENÇÃO **A não observância ou o incumprimento dos pontos a seguir mencionados, poderá causar uma descarga elétrica, incêndios, acidentes graves ou morte:**

- Antes de trabalhos de instalação, manutenção ou modificação, desligue a tensão de alimentação, protegendo-a contra uma nova ligação involuntária.
- Não efectue nenhuma modificação ou tentativa de reparação no aparelho. Quando necessário contacte o seu distribuidor. Não abra o aparelho.
- Proteger a fonte de alimentação contra a introdução inadvertida de corpos metálicos, como por ex., clipes ou outras peças de metal.
- Não usar o aparelho em ambientes húmidos. Não usar o aparelho em ambientes propensos a condensações.
- Não tocar enquanto estiver em funcionamento, nem após a desligar. A superficie poderá estar quente e provocar lesões.

Headquarters: PULS GmbH, Elektrastr. 6, 81925 Munich, Germany, www.pulspower.com

Germany +49 89 9278 0 | **France** +33 478 668 941 | **Austria** +49 89 9278 0 | **Switzerland** +41 56 450 1810 | **Japan:** +81 52 211 7062
China +86 400 829 8558 | **North America** +1 630 587 9780 | **Singapore** +65 6684 2310 | **United Kingdom** +44 1525 841001

The information in this document is believed to be accurate and reliable and may change without notice
LRI Distribuída no Brasil pela LRI | vendas@lri.com.br | 51 2129-3000

Product Description

The PISA11.410 is a DIN rail mountable DC/DC converter, which provides a floating, stabilized and galvanically separated SELV/PELV output voltage.

Intended Use

This device is designed for installation in an enclosure and is intended for commercial use, such as in industrial control, process control, monitoring and measurement equipment or the like. Do not use this device in equipment where malfunction may cause severe personal injury or threaten human life.

Installation Instructions

Install device in an enclosure providing protection against electrical, mechanical and fire hazards.
Install the device onto a DIN rail according to EN 60715 with the input terminals on the bottom of the device. Other mounting orientations require a reduction in output current.

Make sure that the wiring is correct by following all local and national codes. Use appropriate copper cables that are designed for a minimum operating temperature of 60°C for ambient temperatures up to +45°C, 75°C for ambient temperatures up to +60°C and 90°C for ambient temperatures up to +70°C. Ensure that all strands of a stranded wire enter the terminal connection.
Unused screw terminals should be securely tightened.
The device is designed for pollution degree 2 areas in controlled environments. No condensation or frost allowed.
The enclosure of the device provides a degree of protection of IP20.
The input can be powered from a regulated power supply or a similar DC source.
The input must be powered from a PELV or SELV source in order to maintain a SELV or PELV output.
Check for correct input polarity. The device will not operate when the voltage is reversed.
A disconnecting means shall be provided for the input of the device.
The device is designed as “Class of Protection III” equipment according to IEC 61140.
The device is designed for convection cooling and does not require an external fan. Do not obstruct airflow and do not cover ventilation grid!
The device is designed for altitudes up to 6000m.
Keep the following minimum installation clearances: 40mm on top, 20mm on the bottom.
Left and right: 0mm if the total output current of the PISA module is less than 15A, min. 6.4mm if the total output current is equal or higher than 15A and the ambient temperature is between 45°C and 60°C, min. 6.4mm if the total the ambient temperature is between 61°C and 70°C.
The device is designed, tested, and approved for branch circuits up to 20A without additional protection device. If an external fuse is utilized, select sufficiently large circuit breakers to avoid a nuisance tripping of the circuit breaker when all outputs of the PISA 11 device are fully loaded, but do not use circuit breakers exceeding 25A.
The maximum surrounding air temperature is +70°C. The operational temperature is the same as the ambient or surrounding air temperature and is defined 2cm below the device.
The device is designed to operate in areas between 5% and 95% relative humidity.

Installation Instructions for Hazardous Location Areas

The device is suitable for use in Group II Category 3 (Zone 2) environments.
Classification: ATEX: EPS 11 ATEX 1 327 X, II 3G Ex ec nC IIC T4 Gc / IECEx EPS 22.0054X
WARNING EXPLOSION HAZARDS!
For non-standard mounting orientations, i.e. input terminals not on bottom, a reduction of output current is required (for details, please refer to datasheet PISA11.410). Substitution of components may impair suitability for this environment.
Do not disconnect the device or operate the voltage adjustment unless power has been switched off or the area is known to be non-hazardous. The signal-connector may not be used in hazardous location areas unless additional measures are met to avoid an unintended disconnection (e.g. an additional mechanical fixation).
A suitable enclosure must be provided for the end product which has a minimum protection of IP54 and fulfils the requirements of the EN 60079-7.

Functional Description

The output is electronically protected against no-load, overload and short circuit and can supply any kind of loads, including unlimited inductive loads and capacitive loads.
Do not apply return voltages from the load to the output terminals higher than 30V.
Do not parallel outputs for higher output currents.
Do not connect outputs in a series connection for higher output voltages. Do not connect batteries for charging purposes to the output of the device.

Synchronization of Multiple PISA Modules

If multiple PISA modules are used on the same power supply, it is recommended to connect the sync. bus of all modules together. If one unit shuts down due to the protection function of the input voltage protection circuit (safeguard), all other modules will shut down too. This avoids a false interpretation of which output channel caused the problem. If the sync. terminals are not linked, the module with the highest safeguard protection voltage level (caused by tolerances) would shutdown first regardless whether the failure was caused by this module or not.
Please note: If the cause for the shutdown was an over-current of one individual channel, only this module will shut down and the other modules will stay on. In this case the sync. line has no impact on the other modules.

Technical Data

All values are typical figures specified at 24Vdc input voltage, 4x 5A output currents, 25°C ambient temperature and after a 5 minutes run-in time unless otherwise noted.

Input voltage	DC 24V	±25%
Required input voltage for turning-on of outputs	21.4Vdc	
Input current	20A	
Internal current consumption	43mA	
Voltage protection level	21.4V	Safeguard value
Output current per channel	10A	Below +60°C ambient
Total output current for all channels	20A	Below +60°C ambient
Tripping characteristics	see curve below	
Tripping delay	1s	At 20A channel current
	8ms	At short circuit
Load capacitance capability	33mF	Per channel with add. 5A resistive load
	33mF	For all channels in total with add. 5A resistive load
Power losses	1.0W	
Temperature range	-25 to +70°C	Derate output current linearly from 20A to 15A (sum of all output currents) between 60°C and 70°C. Derate the output current equally between the individual outputs.
Max. wire size (litz wire)	0.2-4mm²	For power terminals
Wire size AWG	AWG 20-10	For power terminals
Wire stripping length	7mm	For power terminals
Tightening torque	0.8Nm	For power terminals
Max. wire size (litz wire)	0.2-1.5mm²	For signal terminals
Wire size AWG	AWG 24-16	For signal terminals
Wire stripping length	6mm	For signal terminals
Tightening torque	0.35Nm	For signal terminals
Size (wxhxd)	45x75x91mm	Without DIN rail
Weight	120g	

Functional Diagram

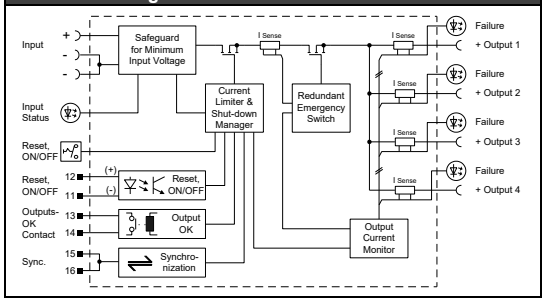

Output Characteristic

