EN	**FPT500.247-064-102 Installation Manual**	**Power Supply, 3-Phase, 24V, 500W,**
DE	**FPT500.247-064-102 Installationsanleitung**	**Stromversorgung, 3-Phase, 24V, 500W**
FR	**FPT500.247-064-102 Manuel d'installation**	**Alimentation d'Énergie, 3-Phase, 24V, 500W**
ES	**FPT500.247-064-102 Manual de instalación**	**Fuente De Alimentación, 3-Phase, 24V, 500W**
IT	**FPT500.247-064-102 Manuale di Installazione**	**Alimentazione Elettrica, 3-Phase, 24V, 500W**
PT	**FPT500.247-064-102 Manual de instalação**	**Fonte De Alimentação, 3-Phase, 24V, 500W**

Doc. ID: PU-451.015.49-xxB (2022-04-27-AC2)



Read this first! — English

Before operating this device, please read this manual thoroughly and retain this manual for future reference! This device may only be installed and put into operation by qualified personnel. If damage or malfunction should occur during operation, immediately turn power off and send device to the factory for inspection. The device does not contain serviceable parts. The information presented in this document is believed to be accurate and reliable and may change without notice. For any clarifications the English translation will be used.

⚠ WARNING **Risk of electrical shock, fire, personal injury, or death:**

- Turn power off before working on the device. Protect against inadvertent re-powering.
- Do not open, modify or repair the device.
- Do not touch during power-on and immediately after power-off. Hot surfaces may cause burns.

Vor Inbetriebnahme lesen! — Deutsch

Bitte lesen Sie diese Warnungen und Hinweise sorgfältig durch, bevor Sie das Gerät in Betrieb nehmen. Bewahren Sie die Anleitung zum Nachlesen auf. Das Gerät darf nur durch fachkundiges und qualifiziertes Personal installiert werden. Bei Funktionsstörungen oder Beschädigungen schalten Sie sofort die Versorgungsspannung ab und senden das Gerät zur Überprüfung ins Werk. Das Gerät beinhaltet keine Servicebauteile. Die angegebenen Daten dienen allein der Produktbeschreibung und sind nicht als zugesicherte Eigenschaften im Rechtssinne aufzufassen. Im Zweifelsfall gilt der englische Text.

⚠ WARNUNG **Missachtung nachfolgender Punkte kann einen elektrischen Schlag, Brände, schwere Unfälle oder Tod zur Folge haben:**

- Schalten Sie die Eingangsspannung vor Installations-, Wartungs- oder Änderungsarbeiten ab und sichern Sie diese gegen unbeabsichtigtes Wiedereinschalten.
- Führen Sie keine Änderungen oder Reparaturversuche am Gerät durch. Gerät nicht öffnen!
- Gehäuse nicht während des Betriebes oder kurz nach dem Abschalten berühren. Heiße Oberflächen können Verletzungen verursachen.

A lire avant mise sous tension! — Français

Veuillez lire ces instructions de montage et d'entretien avant de mettre l'alimentation sous tension. Conservez ce manuel qui vous sera toujours utile. Cette alimentation ne doit être installée que par du personnel qualifié et compétent. En cas de dommage ou dysfonctionnement, coupez immédiatement la tension d'alimentation et retournez l'appareil à l'usine pour vérification. ! L'alimentation ne contient pas de pièces échangeables Les données indiquées dans ce document servent uniquement à donner une description du produit et n'ont aucune valeur juridique. En cas de divergences, le texte anglais fait foi.

⚠ AVERTISSEMENT **Prendre en compte les points suivants, afin d'éviter toute détérioration électrique, incendie, dommage aux personnes ou mort:**

- Mettre l'alimentation hors tension avant toute intervention sur celle-ci et s'assurer qu'il n'y a pas risque de redémarrage.
- Ne pas ouvrir, modifier ou réparer l'alimentation.
- Ne pas toucher le carter pendant le fonctionnement ou directement après la mise hors tension. Surface chaude risquant d'entraîner des blessures.

Lea primero! — Español

Conserve este manual como referencia para futuras consultas. La fuente de alimentación solo puede ser instalada y puesta en funcionamiento por personal cualificado. Por favor lea detenidamente este manual antes de conectar la fuente de alimentación. Si se produce un fallo o mal funcionamiento durante la operación, desconecte inmediatamente la tensión de alimentación. En ambos casos, el equipo debe ser inspeccionado en fábrica. La información presentada en este documento es exacta y fiable en cuanto a la descripción del producto y puede cambiar sin aviso. En casa de duda, prevalece el texto inglés.

⚠ ADVERTENCIA **Riesgo de descarga eléctrica, incendio, accidente grave o muerte:**

- Desconectar la tensión de red antes de trabajar en la fuente de alimentación. Evite una posible reconexión involuntaria.
- No realizar ninguna modificación o reparación de la unidad. No abrir la unidad.
- No tocar durante el funcionamiento ni inmediatamente después del apagado. El calor de la superficie puede causar quemaduras graves.

Leggere prima questa parte! — Italiano

Prima di collegare il sistema di alimentazione elettrica si prega di leggere attentamente le seguenti avvertenze. Conservare le istruzioni per la consultazione futura. Il sistema di alimentazione elettrica deve essere installato solo da personale competente e qualificato. Se durante il funzionamento si verificano anomalie o guasti, scollegare immediatamente la tensione di alimentazione. In entrambi i casi è necessario far controllare l'apparecchio dal produttore! I dati sono indicati solo a scopo descrittivo del prodotto e non vanno considerati come caratteristiche garantite dell'apparecchio. In caso di differenze o problemi è valido il testo inglese

⚠ AVVERTENZA **Il mancato rispetto delle seguenti norme può provocare folgorazione elettrica, incendi, gravi incidenti e perfino la morte:**

- Prima di eseguire interventi di installazione, di manutenzione o di modifica scollegare la tensione di rete ed adottare tutti i provvedimenti necessari per impedirne il ricollegamento non intenzionale.
- Non tentare di aprire, di modificare o di riparare da soli l'apparecchio.
- Non toccare quando acceso e subito dopo lo spegnimento. La superficie calda può causare scottature.

Leia primeiro! — Português

Recomendamos a leitura cuidadosa das seguintes advertências e observações, antes de colocar em funcionamento a fonte de alimentação. Guarde as Instruções para futura consulta, em casos de dúvida. A fonte de alimentação deverá ser instalada apenas por profissionais da área, tecnicamente qualificados. Se por acaso, durante a utilização ocorrer algum defeito de funcionamento ou dano, desligue imediatamente a tensão de alimentação. Em ambos os casos, será necessária uma verificação na Fábrica! Os dados mencionados têm como finalidade somente a descrição do produto, e não devem ser interpretados como propriedades garantidas no sentido jurídico. Em caso de duvidas aplica-se o texto em inglês.

⚠ ATENÇÃO **A não observância ou o incumprimento dos pontos a seguir mencionados, poderá causar uma descarga elétrica, incêndios, acidentes graves ou morte:**

- Antes de trabalhos de instalação, manutenção ou modificação, desligue a tensão de alimentação, protegendo-a contra uma nova ligação involuntária.
- Não efectue nenhuma modificação ou tentativa de reparação no aparelho. Quando necessário contacte o seu distribuidor. Não abra o aparelho.
- Não tocar enquanto estiver em funcionamento, nem após a desligar. A superficie poderá estar quente e provocar lesões.

Headquarters: PULS GmbH, Elektrastr. 6, 81925 Munich, Germany, www.pulspower.com
Germany +49 89 9278 0 | **France** +33 478 668 941 | **Austria** +43 2764 3213 | **Switzerland** +41 56 450 18 10
China +86 512 62881820 | **North America** +1 630 587 9780 | **Singapore** +65 6684 2310 | **United Kingdom** +44 1525 841001

The information in this document is believed to be accurate and reliable and may change without notice.
LRI Distribuída no Brasil pela LRI | vendas@lri.com.br | 51 2129-3000

Product Description

The FPT500.247-064-102 is a stand-alone power supply for single phase mains systems, which provides a stabilized and galvanically separated PELV/ES1 output voltage at 3 outputs.
The negative potential of the outputs is permanently connected to PE within the unit.
The housing is rated as IP65 and IP67 according IEC60529 and provides protection against electrical, mechanical and fire hazards.
One output fulfills the requirements for a limited power source according to NEC Class2.
The device is equipped with an IO-Link Interface V1.1 to parameterize and access data.

Intended Use

This indoor use device is intended for commercial use, such as in industrial control, process control, monitoring, measurement or the like. Do not use this device in equipment, where malfunctioning may cause severe personal injury or threaten human life, without additional appropriate safety devices, that are suited for the end-application.
If used in a manner outside of its specification, the protection provided by the device may be impaired.

Installation Instructions

Install the device with the terminals on the bottom of the device. Other mounting orientations require a reduction in output current. When installing watch out for the risk of injury from sharp edges and assure that when installed any sharp edges on the back cannot be accessed and cannot cause injury.
Use 4 screws (2 on top and 2 on bottom mounting holes) suitable for the underground and a strength comparable to M4 or UNC 8-32 screws.
The device is designed for pollution degree 3 areas in controlled environments.
The enclosure of the device provides a degree of ingress protection of IP65 and IP67 when installed with all mating connectors firmly connected. Assure that during installation no moisture or dirt gets into the connections. Operation in areas where moisture or condensation can be expected is possible.
The device is designed as "Class of Protection I" equipment according to IEC 61140. Do not use without a proper PE (Protective Earth) connection.
For TN,TT mains systems with earthed neutral and IT star mains systems with insulation monitoring the device is designed for overvoltage category III zones up to 2000m (6560ft) and for overvoltage category II zones up to 5000m (16400ft). For TN, TT, IT delta mains systems or IT star mains systems without insulation monitoring the device is intended for overvoltage category II zones up to 2000m (6560ft). The device is designed to be safe in case of a single phase loss and does not require an external protection.
The device is designed for convection cooling without a fan. Do not obstruct airflow.
The device is designed for altitudes up to 5000m (16400ft). Above 2000m (6560ft) a reduction in output current is required and the operation is limited according the mains systems description above. Keep the following minimum installation clearances: 50mm on top and bottom, 10mm on the front, the left and the right side.
The device is designed, tested and approved for branch circuits up to 20A (UL) and 32A (IEC) without additional protection device. If an external fuse is utilized, do not use circuit breakers smaller than 6A B- or C-characteristic to avoid a nuisance tripping of the circuit breaker.
Make sure that you only use plugs and cables rated for the device output current and the required temperature range. Follow all local and national codes for installation.
WARNING: Risk of fire or electric shock. Do not connect outputs or devices in parallel for higher output currents. Do not connect the negative potential of any output to PE.
The maximum permissible ambient air temperature is +70°C (+158°F). The operational temperature is the same as the ambient or ambient air temperature and is defined 2cm below the device.
Cleaning only with a damp cloth.

Functional Description

The output is electronically protected against no-load, overload and short circuit and can supply any kind of loads, including inductive and capacitive loads. If capacitors with a capacitance >20mF are connected to one output, this output might switch off after turning the unit or the output on or connecting the load. Do not apply return voltages from the load to the output terminals higher than 35V. Feed-back energy from a load must be below 2.5J.
The green Status LED reports an output above 90% of the adjusted voltage of a running device and no output tripped due to overcurrent or overtemperature and all three phase voltages are present.
The device has an internal overtemperature protection. If the temperature is too high the unit shuts down and starts automatically again after cooling off. Each output will get the same state as before the shutdown.
In case of an internal defect, a redundant circuit limits the maximum output voltage to 32.5V. The output shuts down and automatically attempts to restart.
IO-Link gives access to internally measured parameters and can be used to change settings. For IODD files and additional descriptions please visit www.pulspower.com.

LED bargraph and push-buttons:

The LED bar normally displays the actual output power as percentage value. 100% equals an output power of 500W. LEDs up to and including 100% are green, the LEDs above 100% are orange. With pressing the up / down buttons you can see the percentage of each output. The orange LED indicates the selected output.
If you press the "Set Mode" button for 3 seconds all LEDs light up briefly and one LED stays on, showing the actual output voltage. With pressing the up or down button you can change the set voltage to the values indicated by the green LED. All orange LEDs are dark. The voltage is set immediately and the value stored until the next change. If you press the "Set Mode" button again you can set the output current limit for the selected channel indicated by the orange LED. With the up / down buttons the current limit is changed to the values indicated by the single lit green LED. The value is stored until the next change. Select other outputs with the “Set Mode” button. Without further pressing of push-buttons, the LED bar will return from any other mode to normal mode after 15s. With the buttons at each channel the channel can turned on/off manually by pressing for at least 1s. The current limit for the NEC Class2 output cannot be changed.

Mating connectors:

Use a 4 Pin 7/8” double coded female plug to connect to the input voltage connector (X1). Pin assignment: Pin 1 for L1, Pin 2 for L2, Pin 3 for L3; Pin 4 for PE.
Use a standard M12 A-coded 5 pin female plug for the IO Link.
Use a standard M12 A-coded 5 pin male plug to connect to the output connector (X3). Pin assignment: Pin 1 and 4 for plus; Pin 2 and 3 for minus; Pin5: FE (functional earth).
Use 5 Pin 7/8” male plugs for the output voltage connectors(X4, X5). Pin assignment: Pin 4 and 5 for plus; Pin 1 and 2 for minus; Pin 3: FE (functional earth).

Technical Data

All values are typical figures specified at 3x 400Vac 50Hz input voltage, symmetrical phase voltages, 24V, 500W output load, 25°C ambient temperature and after a 5 minutes run-in time unless otherwise noted.

Output voltage	DC 24V	Nominal
Adjustment range	24 – 28Vdc	Factory setting 24.5V
Output power	Continuous:	
	600W	At +45°C ambient
	500W	At +55°C ambient
	350W	At +70°C ambient
	Derate linearly between +45°C and +70°C	
Output currents	Settable per output; up to 10A	
Input voltage AC	3AC 380 - 480V	±15%
Mains frequency	50 – 60Hz	±6%
Input current AC	0.8 / 0.66A	At 3x400 / 480Vac
Power factor	0.94 / 0.95	At 3x400 / 480Vac
Input inrush current	1.9 / 1.8A peak	At 3x400 / 480Vac, temp. independent
Efficiency	95.8 / 95.6%	At 3x400 / 480Vac
Losses	22.0 / 23.0W	At 3x400 / 480Vac
Hold-up time	24 / 24ms	At 3x400 / 480Vac
Temperature range	-25 to +70°C	
Size (WxHxD)	181x183x59mm	Without connectors
Weight	1200g / 2.7lb	

Functional Diagram

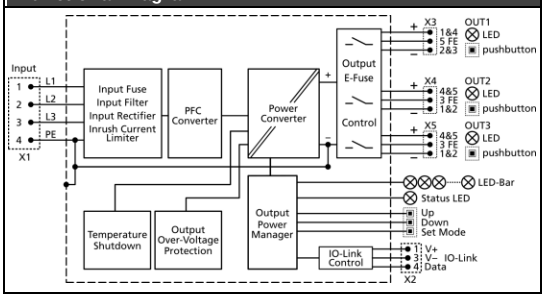

Output Characteristic for output 1

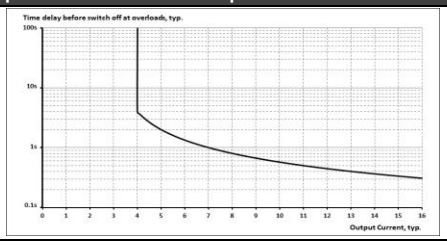

Output Characteristic for output 2 & 3

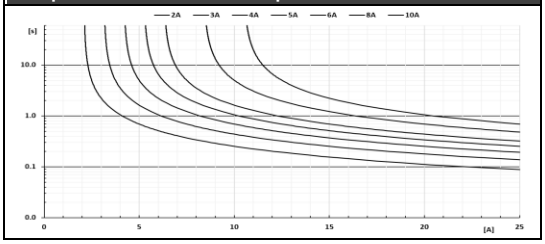

Hole Pattern for Mounting

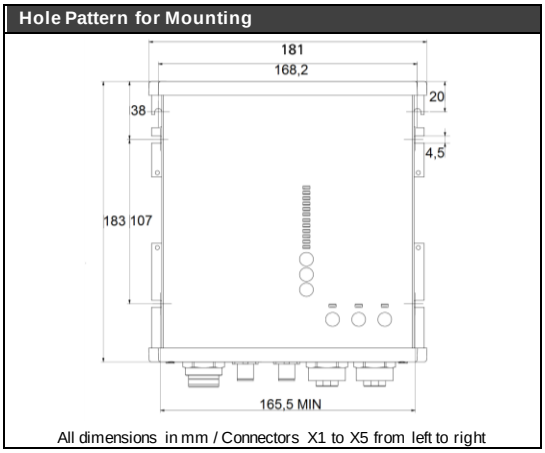

All dimensions in mm / Connectors X1 to X5 from left to right