EN	**FPS100.241-009 Installation Manual**	**Power Supply 1-Phase, 24V, 3.9A**
DE	**FPS100.241-009 Installationsanleitung**	**Stromversorgung 1-Phase, 24V, 3.9A**
FR	**FPS100.241-009 Manuel d'installation**	**Alimentation d'Énergie 1-Phase, 24V, 3.9A**
ES	**FPS100.241-009 Manual de instalación**	**Fuente de alimentación 1-Phase, 24V, 3.9A**
IT	**FPS100.241-009 Manuale di installazione**	**Gruppo di alimentazione 1-Phase, 24V, 3.9A**
PT	**FPS100.241-009 Manual de instalação**	**Fonte de alimentação 1-Phase, 24V, 3.9A**

Doc. ID: PU-472.015.51-xxA (2026-03-10-HE1)
Material number: 500033689-0A-00
DIR number: 1042232
DIR version: 02

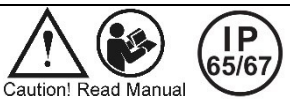

Read this first! — English

Before operating this device please read this manual thoroughly and retain this manual for future reference! This device may only be installed and put into operation by qualified personnel. If damage or malfunction should occur during operation, immediately turn power off and send device to the factory for inspection. The device does not contain serviceable parts.
The information presented in this document is believed to be accurate and reliable and may change without notice. For any clarifications the English translation will be used.

⚠ WARNING **Risk of electrical shock, fire, personal injury, or death:**

- Turn power off before working on the device. Protect against inadvertent re-powering.
- Do not open, modify or repair the device.
- Do not touch during power-on and immediately after power-off. Hot surfaces may cause burns.

Vor Inbetriebnahme lesen! — Deutsch

Bitte lesen Sie diese Warnungen und Hinweise sorgfältig durch, bevor Sie das Gerät in Betrieb nehmen. Bewahren Sie die Anleitung zum Nachlesen auf. Das Gerät darf nur durch fachkundiges und qualifiziertes Personal installiert werden. Bei Funktionsstörungen oder Beschädigungen schalten Sie sofort die Versorgungsspannung ab und senden das Gerät zur Überprüfung ins Werk. Das Gerät beinhaltet keine Servicebauteile.
Die angegebenen Daten dienen allein der Produktbeschreibung und sind nicht als zugesicherte Eigenschaften im Rechtssinne aufzufassen. Im Zweifelsfall gilt der englische Text.

⚠ WARNUNG **Missachtung nachfolgender Punkte kann einen elektrischen Schlag, Brände, schwere Unfälle oder Tod zur Folge haben:**

- Schalten Sie die Eingangsspannung vor Installations-, Wartungs- oder Änderungsarbeiten ab und sichern Sie diese gegen unbeabsichtigtes Wiedereinschalten.
- Führen Sie keine Änderungen oder Reparaturversuche am Gerät durch. Gerät nicht öffnen!
- Gehäuse nicht während des Betriebes oder kurz nach dem Abschalten berühren. Heiße Oberflächen können Verletzungen verursachen.

A lire avant mise sous tension! — Français

Veuillez lire ces instructions de montage et d'entretien avant de mettre l'alimentation sous tension. Conservez ce manuel qui vous sera toujours utile. Cette alimentation ne doit être installée que par du personnel qualifié et compétent. En cas de dommage ou dysfonctionnement, coupez immédiatement la tension d'alimentation et retournez l'appareil à l'usine pour vérification. ! L'alimentation ne contient pas de pièces échangeables
Les données indiquées dans ce document servent uniquement à donner une description du produit et n'ont aucune valeur juridique. En cas de divergences, le texte anglais fait foi.

⚠ AVERTISSEMENT **Prendre en compte les points suivants, afin d'éviter toute détérioration électrique, incendie, dommage aux personnes ou mort:**

- Mettre l'alimentation hors tension avant toute intervention sur celle-ci et s'assurer qu'il n'y a pas risque de redémarrage.
- Ne pas ouvrir, modifier ou réparer l'alimentation.
- Ne pas toucher le carter pendant le fonctionnement ou directement après la mise hors tension. Surface chaude risquant d'entraîner des blessures.

Lea primero! — Español

Conserve este manual como referencia para futuras consultas. La fuente de alimentación solo puede ser instalada y puesta en funcionamiento por personal cualificado. Por favor lea detenidamente este manual antes de conectar la fuente de alimentación. Si se produce un fallo o mal funcionamiento durante la operación, desconecte inmediatamente la tensión de alimentación. En ambos casos, el equipo debe ser inspeccionado en fábrica.
La información presentada en este documento es exacta y fiable en cuanto a la descripción del producto y puede cambiar sin aviso. En casa de duda, prevalece el texto inglés.

⚠ ADVERTENCIA **Riesgo de descarga eléctrica, incendio, accidente grave o muerte:**

- Desconectar la tensión de red antes de trabajar en la fuente de alimentación. Evite una posible reconexión involuntaria.
- No realizar ninguna modificación o reparación de la unidad. No abrir la unidad.
- No tocar durante el funcionamiento ni inmediatamente después del apagado. El calor de la superficie puede causar quemaduras graves.

Leggere prima questa parte! — Italiano

Prima di collegare il sistema di alimentazione elettrica si prega di leggere attentamente le seguenti avvertenze. Conservare le istruzioni per la consultazione futura. Il sistema di alimentazione elettrica deve essere installato solo da personale competente e qualificato. Se durante il funzionamento si verificano anomalie o guasti, scollegare immediatamente la tensione di alimentazione. In entrambi i casi è necessario far controllare l'apparecchio dal produttore!
I dati sono indicati solo a scopo descrittivo del prodotto e non vanno considerati come caratteristiche garantite dell'apparecchio. In caso di differenze o problemi è valido il testo inglese

⚠ AVVERTENZA **Il mancato rispetto delle seguenti norme può provocare folgorazione elettrica, incendi, gravi incidenti e perfino la morte:**

- Prima di eseguire interventi di installazione, di manutenzione o di modifica scollegare la tensione di rete ed adottare tutti i provvedimenti necessari per impedirne il ricollegamento non intenzionale.
- Non tentare di aprire, di modificare o di riparare da soli l'apparecchio.
- Non toccare quando acceso e subito dopo lo spegnimento. La superficie calda può causare scottature.

Leia primeiro! — Português

Recomendamos a leitura cuidadosa das seguintes advertências e observações, antes de colocar em funcionamento a fonte de alimentação. Guarde as Instruções para futura consulta, em casos de dúvida. A fonte de alimentação deverá ser instalada apenas por profissionais da área, tecnicamente qualificados. Se por acaso, durante a utilização ocorrer algum defeito de funcionamento ou dano, desligue imediatamente a tensão de alimentação. Em ambos os casos, será necessária uma verificação na Fábrica!
Os dados mencionados têm como finalidade somente a descrição do produto, e não devem ser interpretados como propriedades garantidas no sentido jurídico. Em caso de duvidas aplica-se o texto em inglês.

⚠ ATENÇÃO **A não observância ou o incumprimento dos pontos a seguir mencionados, poderá causar uma descarga elétrica, incêndios, acidentes graves ou morte:**

- Antes de trabalhos de instalação, manutenção ou modificação, desligue a tensão de alimentação, protegendo-a contra uma nova ligação involuntária.
- Não efectue nenhuma modificação ou tentativa de reparação no aparelho. Quando necessário contacte o seu distribuidor. Não abra o aparelho.
- Não tocar enquanto estiver em funcionamento, nem após a desligar. A superficie poderá estar quente e provocar lesões.

The information in this document is believed to be accurate and reliable and may change without notice.
LRI Distribuída no Brasil pela LRI | vendas@lri.com.br | 51 2129-3000

Product Description

The FPS100.241-009 is an industrial-grade single-phase-input power supply unit with a higher IP-rating for use directly on machines or systems in the field. It has a maximum total output power of 94W. The outputs fulfill the requirements for a limited power source according to NEC Class2.

The negative potential of the outputs is permanently connected to PE within the unit.

Intended Use

This indoor use device is intended for commercial use, such as in industrial control, process control, monitoring, measurement or the like.

The EMC behavior of the device is designed for use in professional equipment in industrial environments and commercial and light industry locations without any cable length restrictions.

Do not use this device in equipment where malfunction may cause severe personal injury or threaten human life without additional appropriate safety devices, that are suited for the end-application.

If used in a manner outside of its specification, the protection provided by the device may be impaired.

Installation Instructions

The housing is rated as IP65 and IP67 according IEC60529 and provides protection against electrical, mechanical and fire hazards. Do not remove or block the pressure compensation membrane on the back of the device!

Use a suitable mounting method - such as screws, bolts, or other appropriate fasteners - ensuring four secure attachment points (two on the top and two on the bottom) and a mechanical strength equivalent to M4 or UNC 8-32 screws.

The device is designed for a pollution degree 2 indoor environment. For outdoor use, install the device in an outdoor enclosure.

For dimensioning the input feed the maximum input currents can be assumed to be 1.2A for AC 100V, 1A for AC 120V and 0.6A for AC 230V. This is the input currents at the maximum allowed continuous output power and 90% of the rated input voltage.

Make sure that the wiring is correct by following the relevant local and national regulations. Use suitable mating connectors and tighten them firmly to avoid failing the ingress protection rating. Ensure that no moisture or dirt gets into the connections during installation. Unused connections must be fitted with an IP65/67 blind cap.

The isolation of the device is designed to withstand impulse voltages of overvoltage category III according to IEC 60664-1.

The device is designed as "Class of Protection I" equipment according to IEC 61140. Do not use without a proper PE (Protective Earth) connection.

The device is suitable to be supplied from TN, TT or IT mains networks, including split phase networks. Any temporary voltage between the input terminals and the PE potential must not exceed 264Vac.

The device is designed for free convection cooling. Do not obstruct airflow!

The device is designed for altitudes up to 5000m (16400ft). Above 2000m (6560ft) a reduction in output current and overvoltage category is required.

Keep the following minimum installation clearances: 30mm on top and 10mm on left and right side.

The device is designed, tested and approved for branch circuits up to 32A (UL) and 32A (IEC) without additional protection device.

WARNING: Risk of fire or electric shock. Do not connect devices in parallel for higher output currents.

The maximum permissible ambient air temperature is +70°C (+158°F). The operational temperature is the same as the ambient or surrounding air temperature and is defined 2.5cm below the device.

The device is designed to operate in areas between 5% and 95% relative humidity.

Cleaning only with a damp cloth.

Functional Description

The output is galvanically isolated from the input voltage. The output is electronically protected against no-load, overload and short circuit. In case of a protection event, audible noise may occur. The device is designed to supply resistive, capacitive or inductive loads. Capacitive loads larger than 100mF can result in an intermittent mode of the device. At heavy overloads (when output voltage falls below 13V), the device delivers continuous output current for 4s. After this, the output is switched off for 18s before a restart attempt with 2s is automatically performed. This cycle is repeated as long as overload exists.

Do not apply return voltages from the load to the output higher than 35V.

The Status LED indicates an output voltage above 90% of the nominal output voltage.

The device is equipped with an over-temperature protection. In case of over-temperature, the output shuts down and restarts automatically after cooling off.

In case of an internal defect, a redundant circuit limits the maximum output voltage to 32.5V. The output switches off and performs three restart attempts. If the failure continues, the output shuts down. Cycle input power to reset.

Mating connectors

X1 - Input Use a 3-pin 7/8" female connector
L = pin 2, N = pin 3, PE = pin with PE symbol

X2 - Output Use 4-pin 7/8" male connector
Output + = pin 1 and pin2
Output - = pin 3 and pin 4

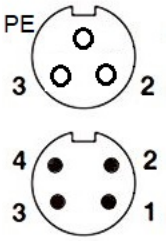

Technical data

All values are typical figures specified at 120Vac/230Vac 50Hz input voltage, 24V 3.9A output load, 25°C ambient temperature and after a 5 minutes run-in time unless otherwise noted.

Output voltage	DC 24V	Nominal
Factory setting	24.05 V	±1%
Adjustment range		Not adjustable
Output current	3.9A	Below +45°C ambient
	2.5A	At +70°C ambient
	6.3A	Short-term, up to 4s, 45°C
	3.8A	Short-term, up to 4s, 70°C
	Negative output pole bonded to ground	
	Derate linearly between +45°C and +70°C	
Input voltage AC	AC 100 – 240V	-15%/+10%
Mains frequency	50 – 60Hz	±6%
Input current AC	0,87 / 0.49A	At 120 / 230Vac
Power factor	0.98 / 0.96	At 120 / 230Vac
Input inrush current	8 / 4A peak	At 120 / 230Vac
Efficiency	93.5 / 94.6%	At 120 / 230Vac
Power losses	7.0 / 5.8W	At 120 / 230Vac
Hold-up time	64 / 64ms	At 120 / 230Vac
Temperature range	-30 to +70°C	
Ingress protection	IP65 and IP67	Acc. to IEC 60529
Size (LxWxH)	165x152x59mm	Without connectors
Weight	690g/ 1.52lb	

Functional diagram

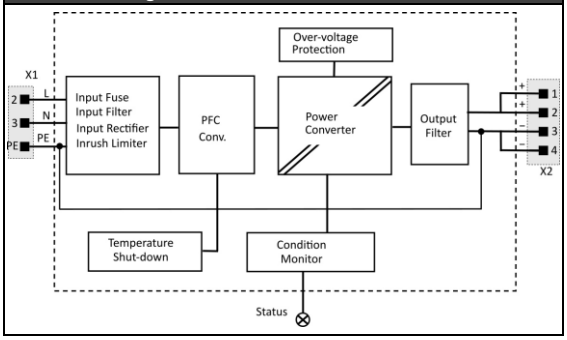

Output characteristics typ.

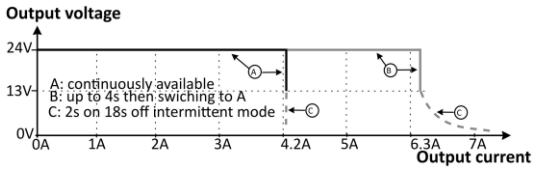

Temperature range

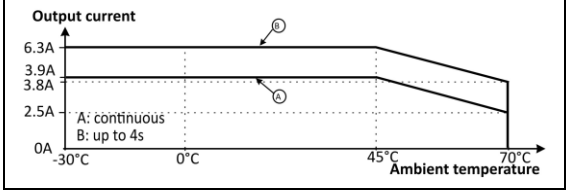

Hole pattern for mounting

